muRata

Messrs. :

Verily Life Science LLC

Specification No. NMM22-5050E

Product Specification

Issued Date: 12/Dec/2017

Part Description: Microwave Coaxial Connector

Customer Part No:

Murata Part No: MM8030-2610B/RJ3/RK0

Acknowledgement of reception

We have received the attached specification.

Date:

Company:

Dept.:

Representative	Received by
(Signature)	(Signature)
(Type)	(Type)

Sales Office

(Signature)

(Type)

(Company name/Dept.)

Technical Dept.

Prepared by

Hiroya Matsukawa (Signature)

Hiroya Matsukawa (Type)

Representative

(Signature)

Toshitaka Kuriyama (Type)

Product Engineering Section

Connector & Antenna Products Department

Murata Mfg.Co.,Ltd.

(Company name/Dept.)

G0F082 (Y15)

1. SCOPE

This product specification is applied to microwave switch coaxial connector SWG type. Please contact us before using any of the products in the applications not described above.

2. PART NUMBER

Part Number	Packaging	Quantity	Remarks
MM8030-2610B	Bulk Package		
MM8030-2610RJ3	178mm dia. reel	3000pcs/reel	ESD protection
MM8030-2610RK0	330mm dia. reel	10000pcs/reel	ESD protection

3. RATING:

Item		Specification
3.1	Voltage Rating	30V r.m.s. maximum
3.2	Power Rating	2W max (at 2GHz)
3.3	Nominal Frequency Range	DC to 11GHz
3.4	Nominal Impedance	50Ω
3.5	Temperature Rating	-40°C to +85°C

4. DESIGN AND CONSTRUCTION

See FIGURE 1.

5. STANDARD PATTERN DIMENSION

See FIGURE 2.

6. STANDARD STENCIL MASK PATTERN

The standard stencil mask pattern is as FIGURE 3. (Thickness is 0.08mm, 0.1mm, 0.12mm)

There is the possibility to have the contact failure by flux shifting into contact point, if the excess solder is used by non standard stencil mask pattern.

It is important to follow the standard land pattern and stencil mask pattern to avoid soldering defects.

7. TAPING SPECIFICATION

(1) The dimension of carrier tape is shown in FIGURE 4.
(2) The dimension of reel is shown in FIGURE 5.
(3) The direction of terminal is shown in FIGURE 6.
(4) The taping condition is shown in FIGURE 7.
(5) Beginning of winding
When the tape runs out, it can be removed from the reel easily.
(6) When the plastic tape is pulled out from the reel, the pilot hole of this tape is the right side.
(7) Peeling off force of cover tape
When cover tape is peeled off as in right figure by a speed of 300mm/min.
The peeling off force should be 0.7N maximum.

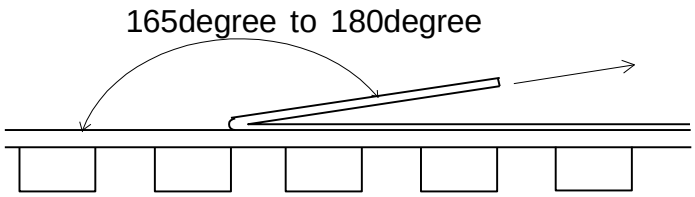

8. ELECTRICAL PERFORMANCE:

Item		Specification	Test
8.1	Insulation Resistance	500 MΩ minimum	MIL-STD-202, Method 302 Testing by applying the specified voltage between inner and outer conductor. Voltage : DC 250V+/-25V Time : 1min
8.2	Withstanding Voltage	No evidence of breakdown	MIL-STD-202, Method 301 Testing by applying the specified voltage between inner and outer conductor. Voltage : AC 300V+/-20V r.m.s Time : 1min
8.3	Contact Resistance	Initial 70mΩmax. (80mΩmax.)*1 After test. 150mΩmax. (160mΩmax.)*1 *1 The specification is *1 value when we measure the device which is not by the test.	Testing by the voltage dropping method with the specified current. 1. Frequency : 1,000Hz. 2. Current :150mA max. 3. Voltage drop : 200μV max. 4. Measurement point : Center contact The conductor resistance is eliminated from data.
8.4	Voltage Standing Wave Ratio (V.S.W.R.)	1.2max.(DC~3GHz) 1.3max.(3GHz ~6GHz) 1.5max.(6GHz ~11GHz)	Measurement system is as following figure. The judgment is done by the data only from work by using gating function. Frequency : 0.1GHz to 11GHz 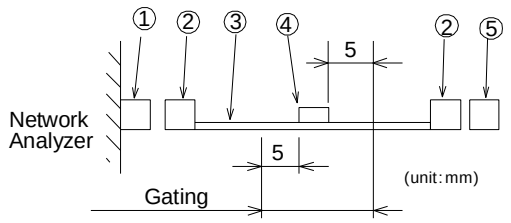 ①:Port 1 ②:SMA Jack ③:Microstrip line ④: MM8030-2610 ⑤:Termination

Item		Specification	Test
8.5	Isolation	20dBmin.(DC~3GHz) 15dBmin.(3GHz ~6GHz) 10dBmin.(6GHz~11GHz)	Measurement system is as following figure. Frequency : 0.1GHz to 11GHz Test probe : MM126310 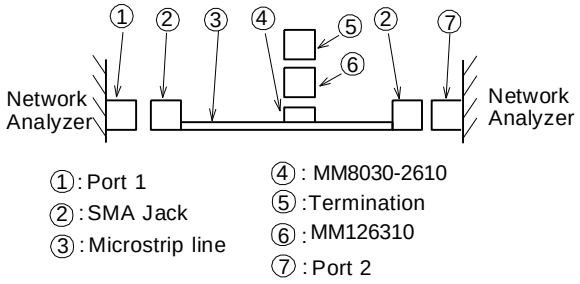
8.6	Insertion Loss	0.1dBmax. (DC~3GHz) 0.2dBmax.(3GHz ~6GHz) 0.5dBmax.(6GHz ~11GHz)	Measurement system is as following figure. Frequency : 0.1GHz to 11GHz The loss of the other conductive part than the product is not included. 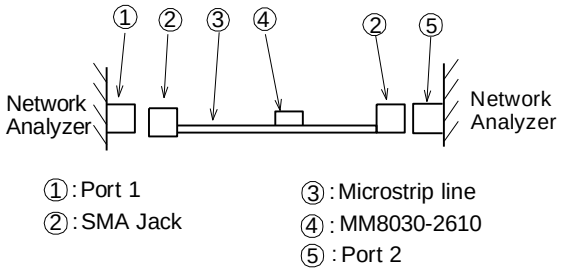

9. MECHANICAL PERFORMANCE:

Item		Specification	Test
9.1	Engage and Disengage Force.	a. Engagement 30N maximum b. Disengagement 5N minimum 35N maximum	a. Engagement force. Measuring the required force for complete engagement to mated connector. b. Disengagement force. Measuring the required force for complete disengagement from mated connector.
9.2	Connector Durability	No evidence of visual or mechanical damage and meet the contact resistance and engage / disengage force specifications.	100 cycles of mating and withdrawal with jig at 12 cycles/min maximum.

Item		Specification	Test
9.3	Adhered Force of Electrode Terminal	No excoriation of electrode terminal.	Soldering test sample with test PWB. Measurement as follows. 1.Force : 40N 2.Time : 5s+/-1s 3.Direction of force 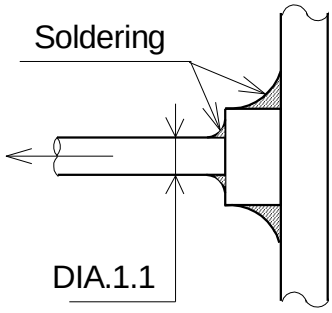 Unit : mm The metal rod is soldered and pulled to vertical direction against the PWB. 4.Solder paste : Sn-3.0Ag-0.5Cu 5.Thickness of solder paste : 120μm
9.4	Strength of PWB Bending	No excoriation of electrode terminal	Soldering test sample with test PWB. Measurement as follows. 1.Thickness of PWB : 1.0mm 2.Speed :1.0mm/s 3.Bend : 1.0mm 4.Time : 30s 5.Direction of force 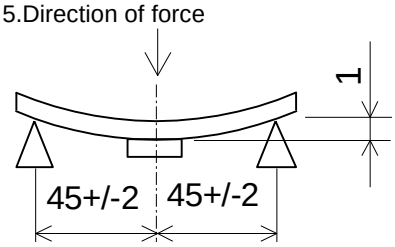 Unit : mm 6.Solder paste : Sn-3.0Ag-0.5Cu 7.Thickness of solder paste : 120μm
9.5	Solderability	At least 95% covered by a continuous new solder coating	MIL-STD-202, Method 208. 1.Solder : Sn-3.0Ag-0.5Cu 2.Flux :Rosin 25%, IPA 75% 3.Temperature : 245°C 4.Time : 3s Test sample should be observed by the magnification of 10 times after the test.
9.6	Resistance to Soldering Heat	No evidence of mechanical damage, and meet the insulation resistance, withstanding voltage and contact resistance specifications.	Reflow soldering by FIGURE 8. Measurement after 24h+/-2h

10. ENVIRONMENTAL PERFORMANCE:

<table>
<tr><th colspan="2">Item</th><th>Specification</th><th>Test</th></tr>
<tr><td>10.1</td><td>Moisture Resistance</td><td>No evidence of mechanical damage, and meet the insulation resistance, withstanding voltage and contact resistance specifications.</td><td>MIL-STD-202, Method 103, Test Condition B.
Temperature : 85 °C
Humidity : 85% RH
Time : 96h
Measurements should be done within 2h after removal from humidity.
The test is done with and without mating adapter by the below test time.
<table>
<tr><th></th><th>Test Time</th></tr>
<tr><td>without adapter</td><td>96h</td></tr>
<tr><td>with adapter</td><td>50h</td></tr>
</table></td></tr>
<tr><td>10.2</td><td>Thermal Shock</td><td>No evidence of mechanical damage, and meet the insulation resistance, withstanding voltage and contact resistance specifications.</td><td>MIL-STD-202, Method 107. Test condition is as follows.
Number of cycles : 50 cycles
<table>
<tr><th>Step</th><th>Temp(°C)</th><th>Time(min)</th></tr>
<tr><td>1</td><td>-40</td><td>30</td></tr>
<tr><td>2</td><td>25</td><td>5 max.</td></tr>
<tr><td>3</td><td>85</td><td>30</td></tr>
<tr><td>4</td><td>25</td><td>5 max.</td></tr>
</table>
Note :The test is done with and without mating adapter.</td></tr>
<tr><td>10.3</td><td>Vibration</td><td>No electrical interruption exceeding 10μs and no evidence of visual or mechanical damage and meet the requirement of the center contact resistance.</td><td>1.Test directions.
3 mutually perpendicular directions
2.Sweep condition
One cycle : 10Hz~100Hz~10Hz (20 min)
10Hz~30Hz : 3mm(0.12 inch) peak to peak
30Hz~100Hz : 60m/s^2
3.Test cycles
1direction 3cycles Total 9cycles
4.Test current : 100 mA</td></tr>
<tr><td>10.4</td><td>Drop</td><td>No electrical interruption exceeding 10μs and no evidence of visual or mechanical damage and meet the requirement of the center contact resistance.</td><td>1.Test direction.
6 mutually perpendicular directions.
2.Test condition
Load : 100g
Height : 1.5m
Floor: Concrete
3.Test cycles
1direction 10times Total 60 times
4.Test current : 100 mA</td></tr>
</table>

11. STANDARD REFLOW TEMPERATURE PROFILE

See FIGURE 8.

12. NOTICE

12.1 Environment Conditions

12.1.1 This product is designed for use of electrical equipment in the environment (temperature, humidity, atmospheric pressure, etc.) specified in this approval drawing: it may not be used in the following environments or under the following conditions :

(1) Ambient air containing corrosive gas (Cl_2, H_2S, NH_3, SO_X, NO_X etc.).
(2) Ambient air containing volatile or combustible gas.
(3) In liquid (water, oil, chemical solution, organic solvents, etc.).
(4) In environments with a high concentration of airborne particles.
(5) In direct sunlight.
(6) Dusty conditions.
(7) In freezing.
(8) Other environments similar to the above conditions.

12.1.2 Contact the manufacturer before using the product in any of the above environments or under any of the above conditions.

12.2 Usage Conditions

12.2.1 Do not apply electrical voltage greater than specified in the drawing. It might be a cause of degradation or destruction of the product. Even if it endures during a short time, long time qualification is not guaranteed.

12.2.2 Confirm that there are not any influences to the product's performance which might be caused by the other components which touch with the product.

12.3 Handling, Storage and Transportation of The Product

12.3.1 Do not apply excessive shock or load to subassembly like soldered printed circuit board in case of handling and transporting it.

12.3.2 Use the product of former delivery first.

12.3.3 Store in manufacturer's package or tightly re-closed box with the following conditions.

Temperature : -10°C ~ +40 °C
Humidity : 15% ~ 85 % RH

Use this product within 6 month after receipt.
Check the terminal solderability before use, if the product has been stored for more than 6 months.

12.4 Safety

12.4.1 This product has two failure modes,- "OPEN" and "SHORT"-.
Please contact the manufacturer before using the product in any other than the previously informed application.

12.5 Soldering

12.5.1 Soldering must be carried out by allowable temperature and time of reflow soldering (FIGURE8) to prevent product from any damages. Please contact us before use if concerning other soldering conditions.

12.5.2 In soldering, do not apply excessive mechanical force to terminals or leads greater than specified in the drawing.

12.5.3 Please note the following in case of soldering terminals or leads of the product.

(1) Use rosin based flux, but not with strong acid flux (Chlorine content should be less than 0.20 wt%).
(2) Flux should be cleaned thoroughly.

12.5.4 Please mount this product at the position so that stress by warp and/or bend of the PWB may not apply to it.

12.5.5 Please avoid the cleaning of this product.

12.6 Handling

Disregard with following notes could give mechanical damage and/or poor electrical performance.

12.6.1 This product fits only with Murata test probes and adaptors that are designed for this product. Any other Murata probes and adaptors, and all of non-Murata probes and adaptors are prohibited to be used with this product. Please note that Murata will never guarantee the quality of products, probes and adaptors if they are not used in compliance with this clause.

12.6.2 The mentioned values in this specification sheet have been obtained according to Murata measuring methods.

12.6.3 This product is just only fit with SWG type probe. Any other probe can not be used with this product.

13. ⚠NOTE

13.1 Please make sure that your product has been evaluated in view of your specifications with our product being mounted to your product.

13.2 You are requested not to use our product deviating from the agreed specifications.

13.3 Please return one duplicate of this product specification to us with your signature to acknowledge your receipt. If the duplicate is not returned within three months, the product specification will be deemed to have been received by you.

13.4 We consider it not appropriate to include any terms and conditions with regard to the business transaction in the product specifications, drawings or other technical documents. Therefore, if your technical documents as above include such terms and conditions such as warranty clause, product liability clause, or intellectual property infringement liability clause, they will be deemed to be invalid.

13.5 Please contact us if you have any question about usage or handling of our product.

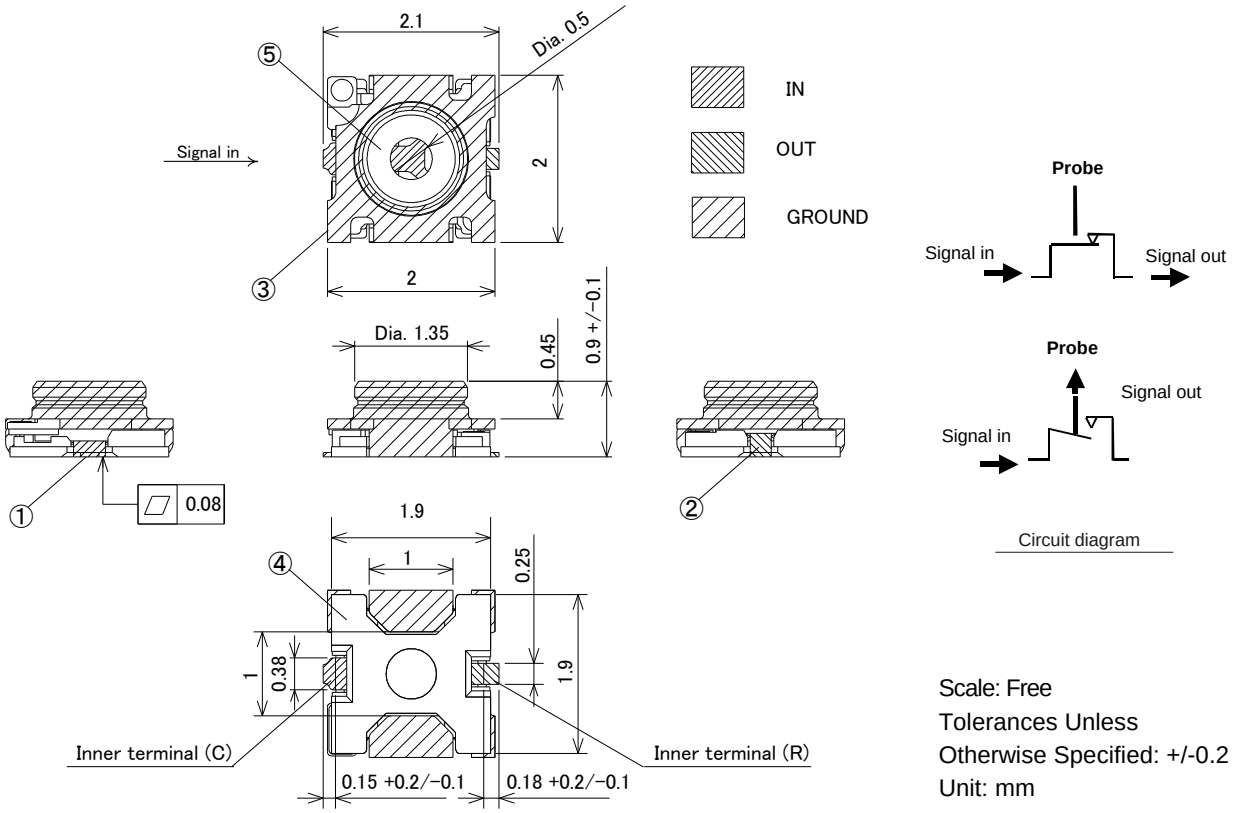

Scale: Free
Tolerances Unless
Otherwise Specified: +/-0.2
Unit: mm

5	Case2	Engineering Plastic	None	1
4	Case1	Engineering Plastic	None	1
3	Outer terminal	Copper Alloy	Gold Plating	1
2	Inner terminal (R)	Stainless Steel	Gold Plating	1
1	Inner terminal (C)	Stainless Steel	Gold Plating	1
No.	Part Name	Material	Finish	Q'ty

FIGURE1. Construction

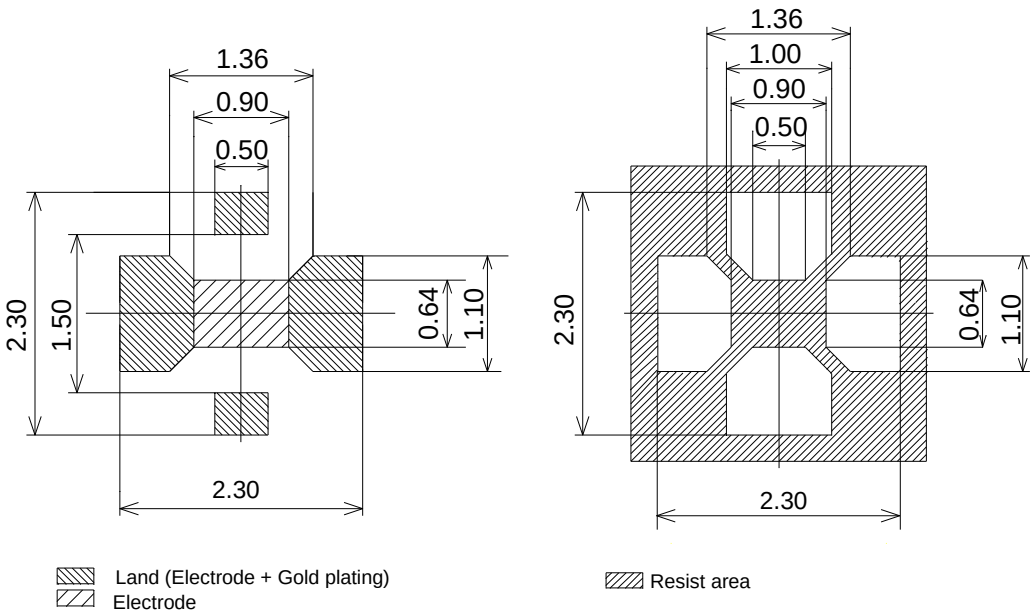

Land pattern & Electrode

Resist pattern

Unit: mm

(Note) I/O pattern is designed to be the impedance match 50 ohm.
The material of PWB is the epoxy resin of glass fabric base. (εr=4.3@1GHz). Thickness is 1.0mm.
The solder resist is printed except for the land pattern on the PWB.
Land pattern and Solder resist pattern must be followed to avoid soldering defects.

FIGURE2. Standard pattern dimensions

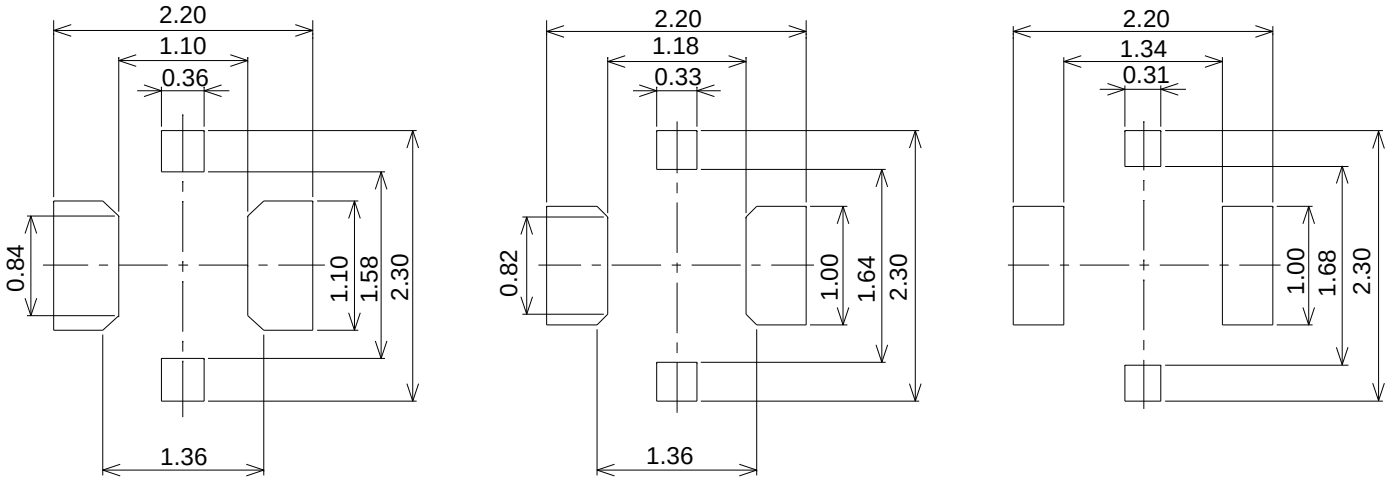

(Thickness:0.08mm) (Thickness:0.10mm) (Thickness:0.12mm)

Unit: mm

(Note) There is the possibility to have the contact failure by flux shifting into contact point,
if the excess solder is used by non standard stencil mask pattern.
Stencil mask pattern must be followed to avoid soldering defects.
This stencil mask pattern is calculated with resist thickness *30μm*.

FIGURE3. Standard stencil mask pattern

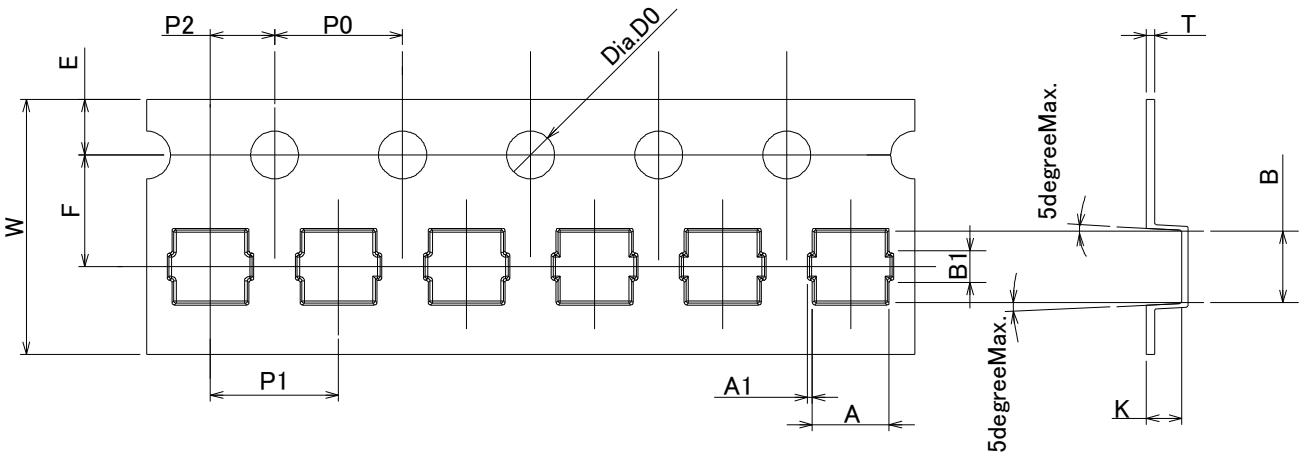

A	B	W	D0	E	F	K
2.28+/-0.1	2.28+/-0.1	8+/-0.2	Dia.1.5±0.1	1.75±0.1	3.5±0.1	1.1±0.1

P0	P1	P2	T	A1	B1
4+/-0.1	4+/-0.1	2+/-0.1	0.25±0.05	0.15±0.1	0.85±0.1

Unit: mm

FIGURE4. Dimensions of carrier tape

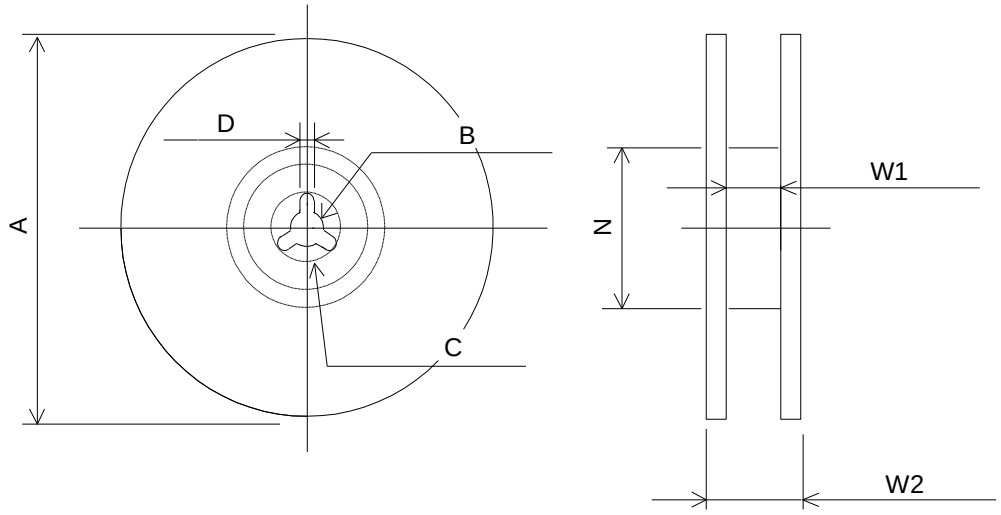

Unit: mm

Murata Part Number	A	B	C	D	N	W1	W2
MM8030-2610RJ3	180+0/-3	13+/- 0.5	21+/- 0.8	2+/- 0.5	Dia.60 +1/0	9 +/-0.3	11.4+/- 1.0
MM8030-2610RK0	330+/- 2.0	13+/- 0.5	21+/- 0.8	2+/- 0.5	Dia.100+/- 1.0	9.4+/-1.0	13.4+/- 1.0

FIGURE5. Dimensions of reel

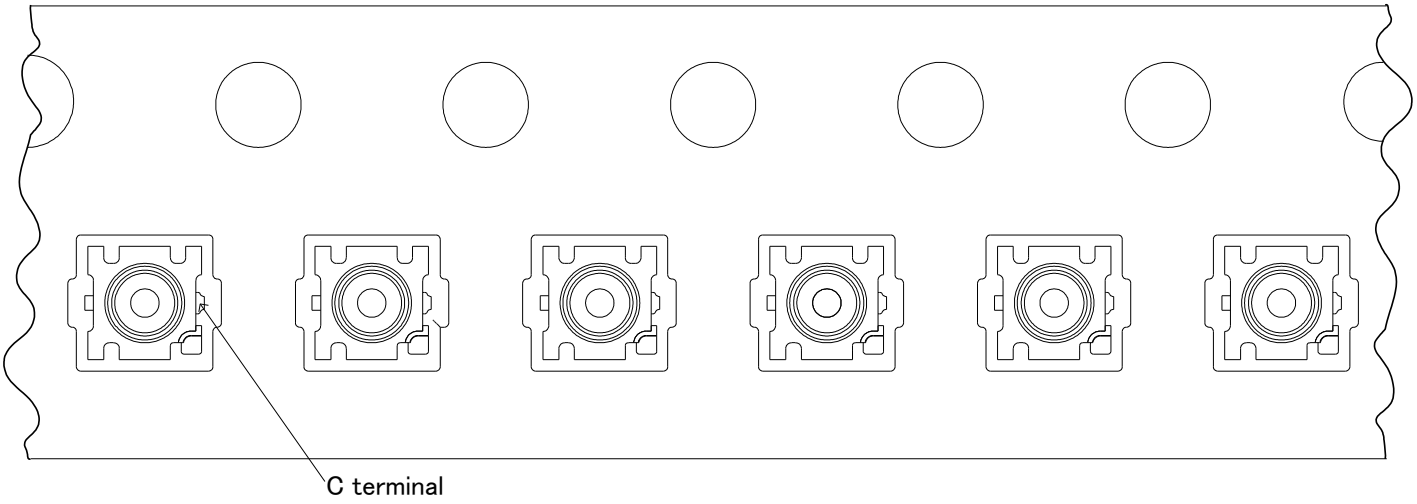

FIGURE6. Direction of terminal

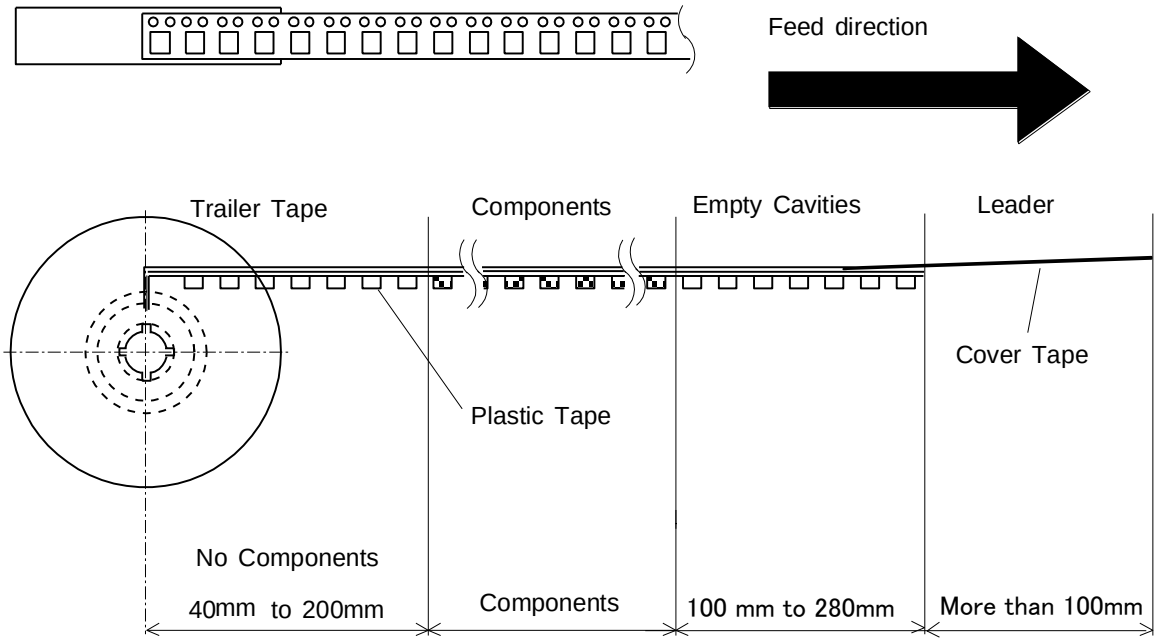

FIGURE7. Taping condition

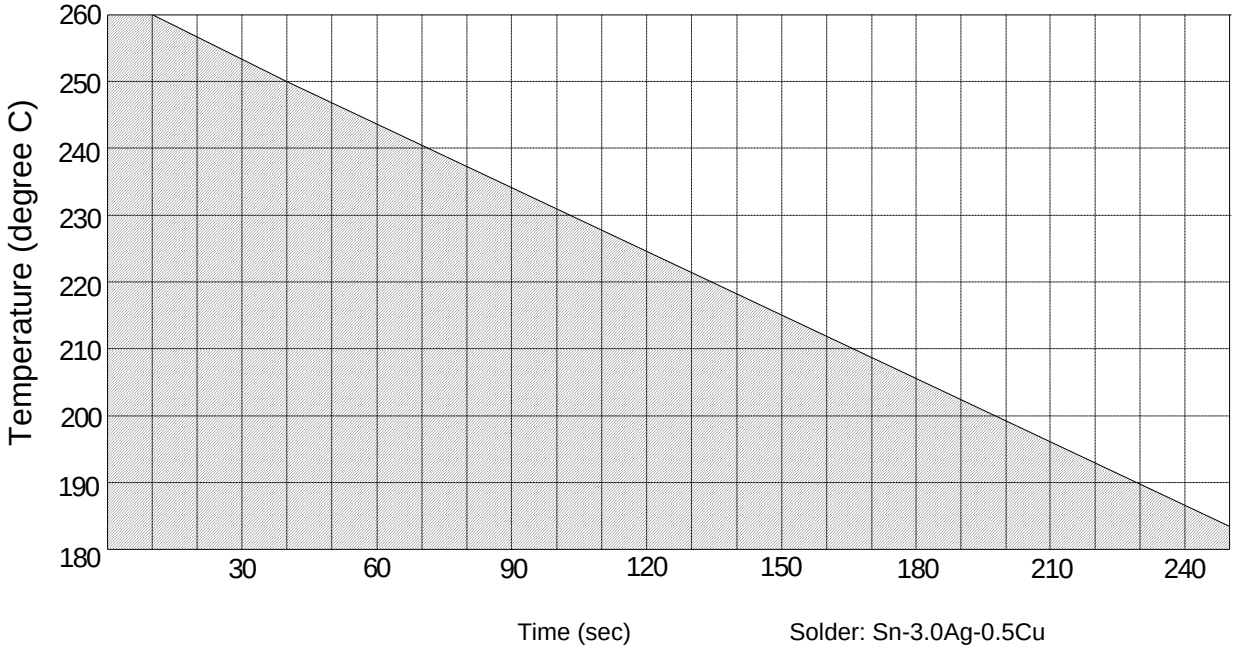

Allowable temperature and time of reflow soldering

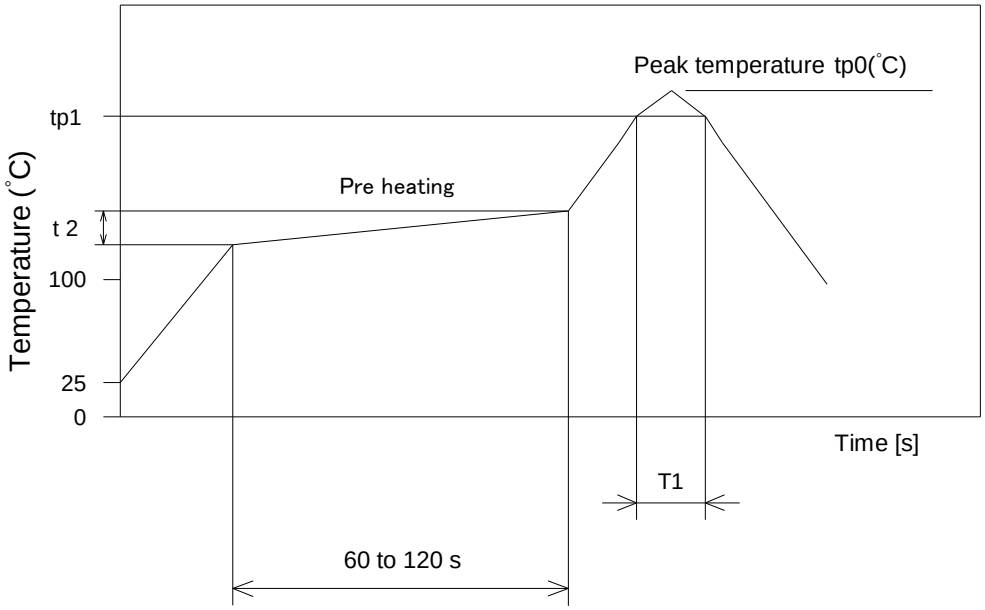

	tp0 (°C)	tp1 (°C)	T1 (s)	t2 (°C)
Standard soldering condition	240+0/-5	220	30 to 60	150 to 180
Resistance to soldering heat condition	260+5/-0	240	30max	150 to 180

・Measuring point of temperature
In-out terminals of the device
・Reflow Soldering
Both convection and infrared rays
Hot air / Hot plate

Reflow soldering conditions

FIGURE8. Reflow soldering condition

⚠ CAUTION

PLEASE READ THIS NOTICE BEFORE USING OUR PRODUCTS.

Please make sure that your product has been evaluated and confirmed from the aspect of the fitness for the specifications of our product when our product is mounted to your product.
All the items and parameters in this product specification/datasheet/catalog have been prescribed on the premise that our product is used for the purpose, under the condition and in the environment specified in this specification. You are requested not to use our product deviating from the condition and the environment specified in this specification.
Please note that the only warranty that we provide regarding the products is its conformance to the specifications provided herein. Accordingly, we shall not be responsible for any defects in products or equipment incorporating such products, which are caused under the conditions other than those specified in this specification.

WE HEREBY DISCLAIMS ALL OTHER WARRANTIES REGARDING THE PRODUCTS, EXPRESS OR IMPLIED, INCLUDING WITHOUT LIMITATION ANY WARRANTY OF FITNESS FOR A PARTICULAR PURPOSE, THAT THEY ARE DEFECT-FREE, OR AGAINST INFRINGEMENT OF INTELLECTUAL PROPERTY RIGHTS.

The product shall not be used in any application listed below which requires especially high reliability for the prevention of such defect as may directly cause damage to the third party's life, body or property. You acknowledge and agree that, if you use our products in such applications, we will not be responsible for any failure to meet such requirements.
Furthermore, YOU AGREE TO INDEMNIFY AND DEFEND US AND OUR AFFILIATES AGAINST ALL CLAIMS, DAMAGES, COSTS, AND EXPENSES THAT MAY BE INCURRED, INCLUDING WITHOUT LIMITATION, ATTORNEY FEES AND COSTS, DUE TO THE USE OF OUR PRODUCTS IN SUCH APPLICATIONS.

- Aircraft equipment.
- Aerospace equipment
- Undersea equipment.
- Power plant control equipment
- Medical equipment.
- Transportation equipment (vehicles, trains, ships, elevator, etc.).
- Traffic signal equipment.
- Disaster prevention / crime prevention equipment.
- Burning / explosion control equipment
- Application of similar complexity and/ or reliability requirements to the applications listed in the above.

We expressly prohibit you from analyzing, breaking, Reverse-Engineering, remodeling altering, and reproducing our product. Our product cannot be used for the product which is prohibited from being manufactured, used, and sold by the regulations and laws in the world.

We do not warrant or represent that any license, either express or implied, is granted under any our patent right, copyright, mask work right, or our other intellectual property right relating to any combination, machine, or process in which our products or services are used. Information provided by us regarding third-party products or services does not constitute a license from us to use such products or services or a warranty or endorsement thereof. Use of such information may require a license from a third party under the patents or other intellectual property of the third party, or a license from us under our patents or other intellectual property.

Please do not use our products, our technical information and other data provided by us for the purpose of developing of mass-destruction weapons and the purpose of military use.
Moreover, you must comply with "foreign exchange and foreign trade law", the "U.S. export administration regulations", etc.

Please note that we may discontinue the manufacture of our products, due to reasons such as end of supply of materials and/or components from our suppliers.

Customer acknowledges that Murata will, if requested by you, conduct a failure analysis for defect or alleged defect of Products only at the level required for consumer grade Products, and thus such analysis may not always be available or be in accordance with your request (for example, in cases where the defect was caused by components in Products supplied to Murata from a third party).

By signing on specification sheet or approval sheet, you acknowledge that you are the legal representative for your company and that you understand and accept the validity of the contents herein.
When you are not able to return the signed version of specification sheet or approval sheet within 90 days from receiving date of specification sheet or approval sheet, it shall be deemed to be your consent on the content of specification sheet or approval sheet.

Customer acknowledges that engineering samples may deviate from specifications and may contain defects due to their development status.
We reject any liability or product warranty for engineering samples.
In particular we disclaim liability for damages caused by

- the use of the engineering sample other than for evaluation purposes, particularly the installation or integration in the product to be sold by you,
- deviation or lapse in function of engineering sample,
- improper use of engineering samples.

We disclaims any liability for consequential and incidental damages.
If you can’t agree the above contents, you should inquire our sales.

Appendix

EVALUATION BOARD DESCRIPTION

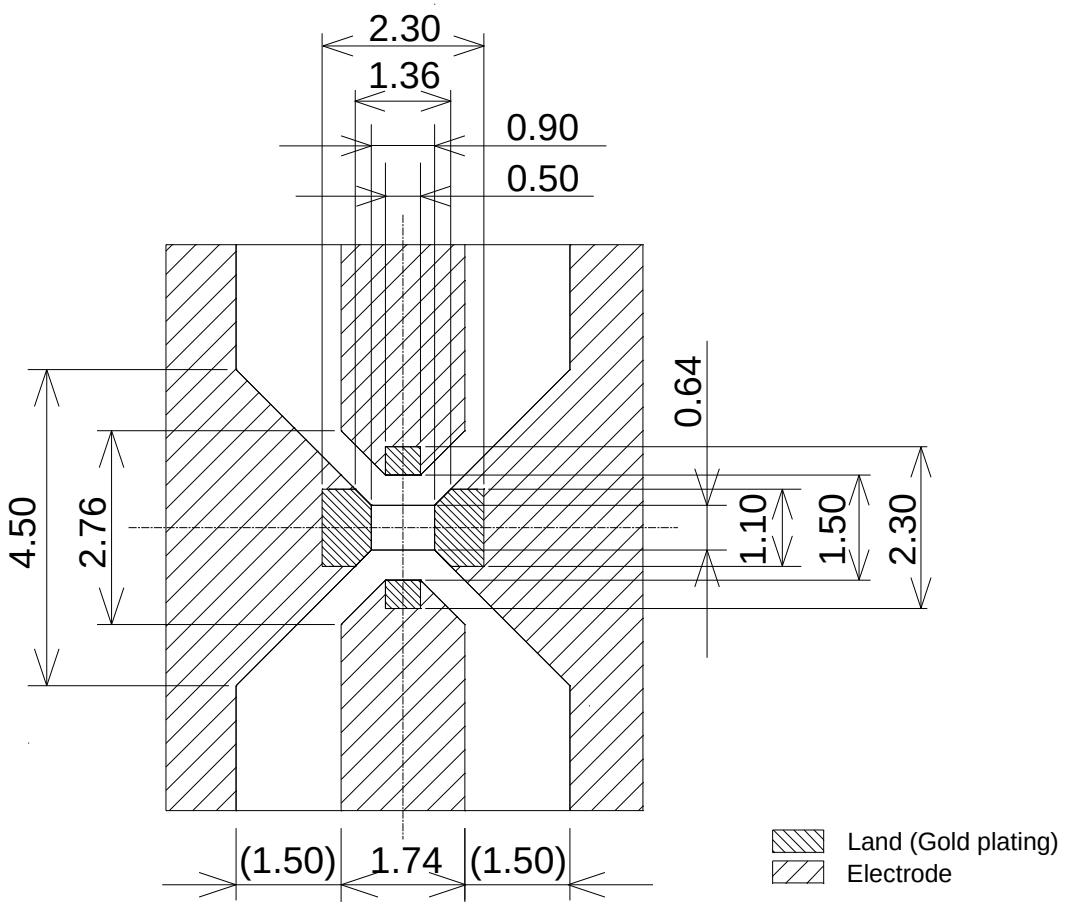

(Note) ･The material of PWB is the epoxy resin of glass fabric base. (εr=4.3@1GHz). Thickness is 1.0mm.
･The solder resist should be printed except for the land pattern on the PWB

Revised List

Number	Page
NMM22-5050	1/1

Date	Revision No.	Revision Item	Revised contents and reason	Rep. (Mgr.)	Prepared by
9/Sep./2015			First release.	T.Kuriyama	T.Yamamoto
6/Jan.2016	A		Revised Figure 2.3.6 Added Appendix	T.Kuriyama	T.Yamamoto
7/Oct./2016	B		Revised Paragraph 12 and Appendix	T.Kuriyama	H.Matsukawa
7/Dec./2016	C		Revised Paragraph 3,6,12,13 and Figure 3	T.Kuriyama	H.Matsukawa
3/Jul./2017	D		Revised Paragraph 7	T.Kuriyama	H. Minami
4/Aug/2017	E		Revised Figure 1	T.Kuriyama	K. Kojima